Prodelin Corporation

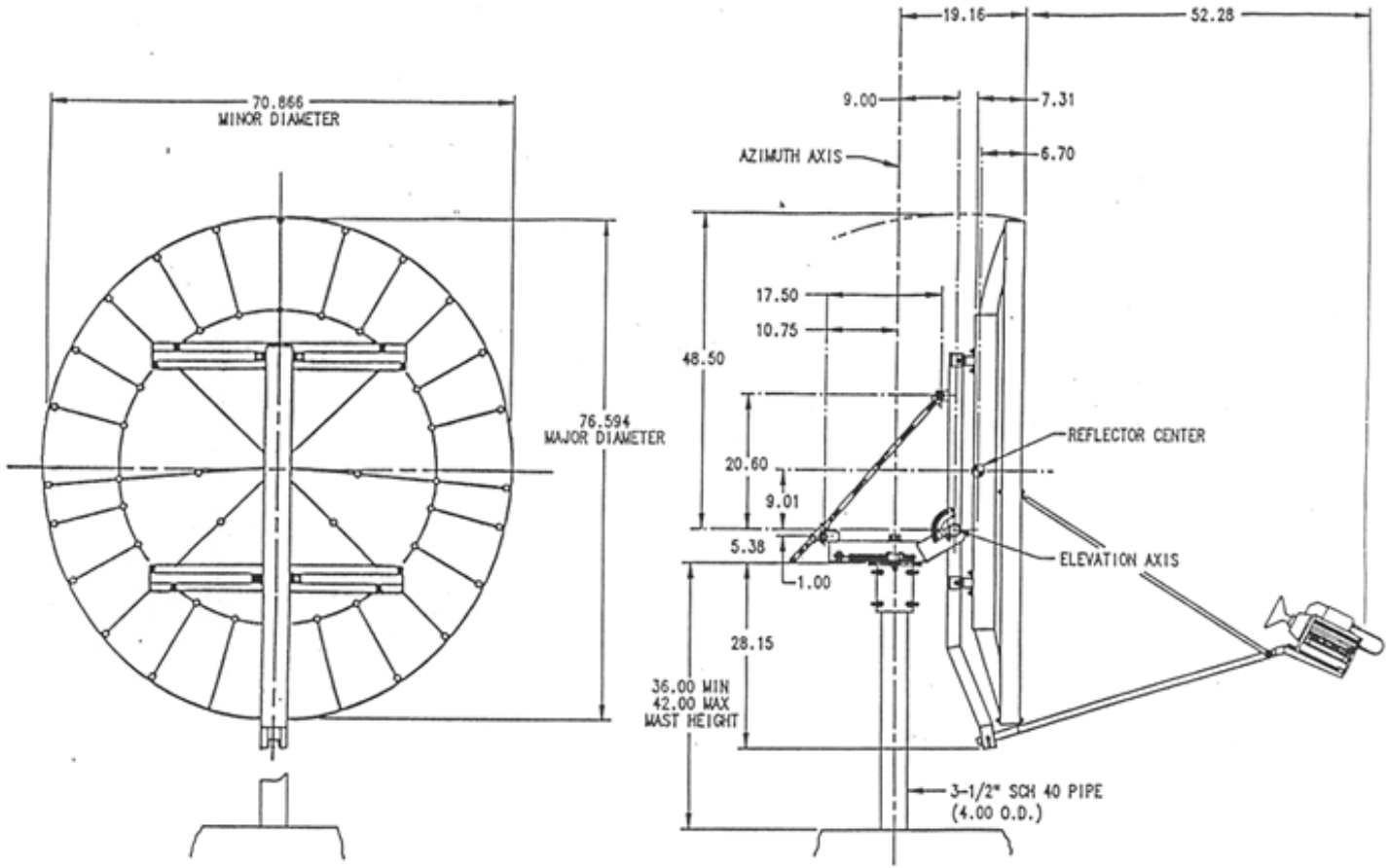

1.8 Meter Series 1184
Ku-Band Receive/Transmit
Antenna Geometry

5002-266 (12-97) © PRODELIN